MINI METROLOGY LAB

Build a stable voltage standard as the first step in constructing a mini metrology lab.

CONRAD R. HOFFMAN*

METROLOGY, THE SCIENCE OF MEASUREMENT, is one of the oldest sciences, and it is an essential ingredient of all other sciences. When the Egyptians built the pyramids, they relied on measurements whose precision we can confirm to this day. The measure of time was also of great importance, as seafaring navigation required accurate time to determine longitude. But the development of the ship's chronometer is another story.

Here, of course, we are concerned with electrical metrology: the science of electrical measurements. Every area of electronics requires that measurements be made. Even when extreme accuracy isn't critical, there is much satisfaction in making measurements accurately and confidently.

The Mini Metrology Lab described in this series will give you two new capabilities. First, it will let you make high-accuracy DC measurements, typically much better than a 4½ digit meter. Second, it will provide you with the standards necessary to calibrate other test equipment to the same accuracy.

The project will also give you hands-on experience with precision measurement techniques, and highlight the more subtle error sources that affect these measurements.

The traditional tool for making very precise DC voltage measurements is based on a slide-wire potentiometer and a galvanometer. That circuit compares a known voltage standard against an unknown voltage. It was the only high-resolution voltmeter until the 1960s.

The instruments used for making such measurements are known as potentiometers. The heart of the instrument, as its name implies, is a potentiometer or variable voltage divider. A basic potentiometer circuit is shown in Fig. 1.

After the unknown voltage is connected to the circuit, the voltage divider is adjusted until the meter indicates zero, or a null reading. The null indicates that the voltage at the tap on the potentiometer is identical to the voltage of the unknown sample. The value of the unknown voltage is then read from the divider setting. A continuous potentiometer is shown for simplicity, but a multi-decade switched divider is normally used because it achieves much better accuracy and stability.

There are several important advantages to this method:

---

*Thanks to Jim Williams and Mark Gordon of Linear Technology Corporation for their assistance with the design of the Mini Metrology Lab.

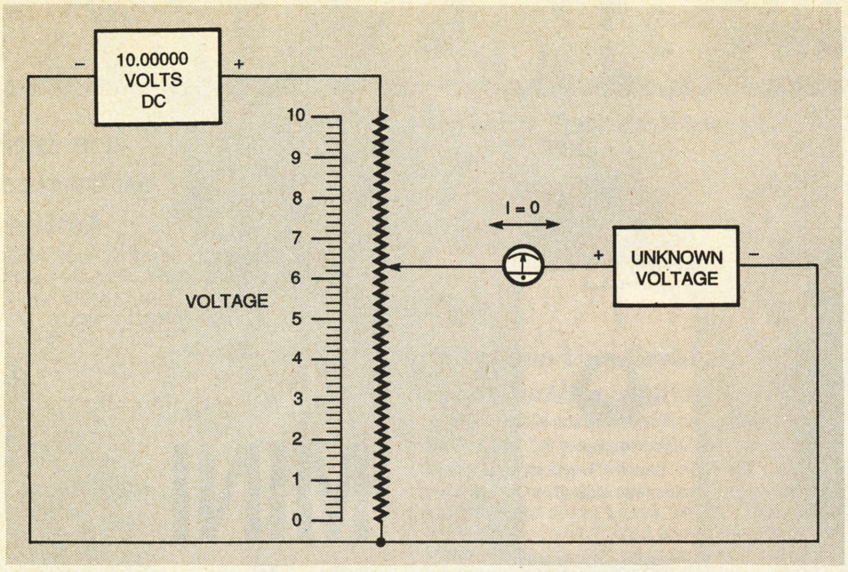

FIG. 1—THE POTENTIOMETER CIRCUIT was the only high-resolution voltmeter until the 1960s. At null, the voltage of the divider equals the voltage of the unknown, and no current flows between them. Here, the wiper is 61.25% up the voltage divider, so the value of the unknown is 6.125 volts.

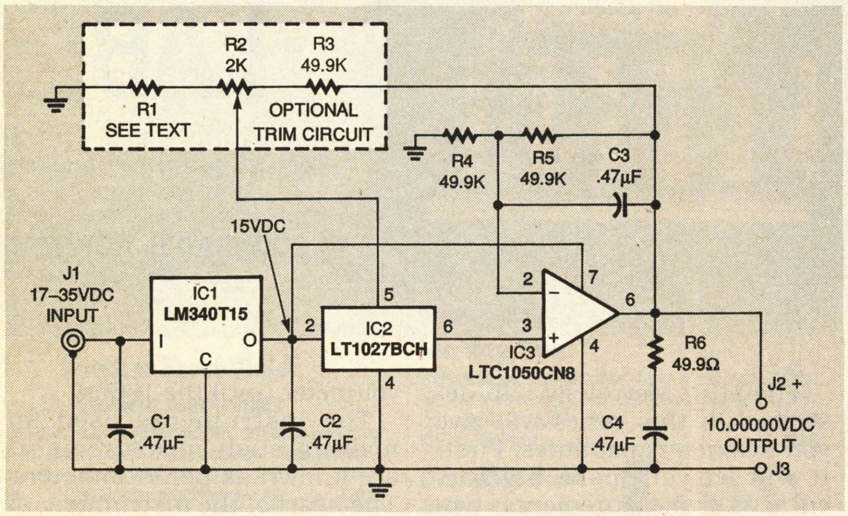

FIG. 2—THE VOLTAGE STANDARD is built around the LT1027 voltage-reference IC. Although the device is pretrimmed within ±0.05%, optional trim circuitry can be installed.

1. The accuracy of the meter is not important, because it is used only to determine the null point. Of course, it should be sensitive and repeatable.

2. Once nulled, there is almost no voltage difference between the divider output and the source being measured. As a result, almost no current flows, and there is no significant loading of the device that is being measured.

3. The voltage divider relies on ratios, not specific values of resistance. It can be checked for accuracy by the user, whenever desired.

4. Only the voltage standard needs to be independently calibrated.

5. It is one of the most accurate techniques available, and is still used today to verify the performance of other instruments.

The complete Mini Metrology Lab that we'll describe will consist of a voltage standard, a null detector, and a Kelvin Varley voltage divider. These can be configured as described above, or can be used separately for various other measurement and calibration purposes.

Carefully built, these classic tools will yield accuracy far beyond what you may be accustomed to. No special equipment is required, and it is not a difficult project. You will need only patience and a good digital voltmeter.

Circuit description

The heart of the voltage standard is the LT1027BCH voltage reference IC manufactured by Linear Technology Corp. It sports a temperature coefficient of two parts per million per degree Celsius (2 PPM/°C), and it comes pre-trimmed within ±0.05%. Provision for optional trim circuitry is included on the board however it requires an additional resistor selection step.

To eliminate sensitivity to input-voltage variations, the incoming supply is regulated at 15 volts DC. This is accomplished with a conventional LM340T15 voltage regulator, which powers both the reference IC and the output amplifier.

The LT1050 amplifier doubles the 5-volt output of the LT1027 to the desired 10 volts DC. It is chopper-stabilized, providing far lower drift than a conventional op-amp. Noise filtering is provided by the 0.47 µF capacitor across the feedback resistor. Note that the LT1050 does not have the output drive of a bipolar device, thus the slightly higher than normal feedback resistors. You should not try to use the voltage standard with loads below 10 kilohms. The 0.47 µF/49.9 ohm output network improves stability when cables and capacitive loads are driven.

Selecting resistors

The ratio of R4 and R5 sets the gain of the output amplifier, and must not change with temperature. To achieve this stability, the feedback resistors must have matched temperature coefficients (tempco).

A commercial manufacturer would simply order matched wirewound or bulk foil parts with the tempco needed. Unfortunately, large minimum-order requirements and high prices force us to seek another solution for this project.

Continued on page 65

METROLOGY LAB

continued from page 36

It turns out that it is quite easy to measure resistor temperature coefficients. Since a bag of 200 good quality, metal-film resistors can be purchased for less than $10, there should be no problem selecting a suitable matched pair inexpensively. In fact, you are apt to find a suitable pair within the first dozen or so that you test.

On a scrap piece of perforated construction board, build the bridge circuit shown in Fig. 3. Be sure to use a multiturn potentiometer for R1, or the bridge will be impossible to zero. You will need a meter that can resolve 0.1 millivolt or better on its lowest DC scale (most DMMs). The bridge can be powered from three 9-volt batteries in series. Connect the resistor under test to the bridge with clip leads.

To determine the resistor tempco, you must heat the resistors in a bath of warm mineral oil, which is non-conductive and non-toxic. An ounce or two in a coffee cup, placed on a cup warmer works well. You want the temperature of the oil somewhere near 50°C (122°F), but the exact value isn't overly important. Don't make it so hot that it can burn you, and don't heat it in your microwave oven; the oil has little electrical loss and heats inefficiently. Keep it well stirred, so the temperature is even throughout.

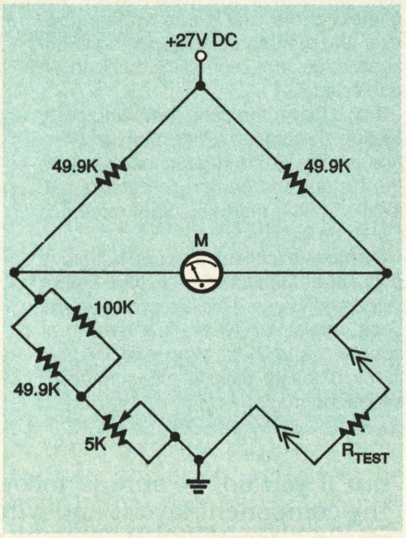

FIG. 3—BUILD THIS BRIDGE CIRCUIT to select matched pairs of resistors for the voltage standard.

TABLE 1—CALCULATING RESISTOR TEMPCO

Meter reading at start:	–0.1 mV
Meter reading after immersion:	1.2 mV
Room temperature:	20°C
Oil temperature:	48°C
The total bridge voltage change:	1.2–(–0.1)=1.3 mV
The resistor change in PPM:	1.3 × 148=192.4 PPM
The temperature difference:	48 - 20=28°C
The resistor tempco	1 92.4/28 = 6.87 PPM/°C

You should be able to zero or nearly zero the meter with R1. With the meter zeroed, immerse the resistor in the hot oil. You should see a change in the reading of up to a few millivolts, and it should stabilize within a few seconds. Record the starting and finishing readings, the oil temperature, and the room temperature. Do this for at least twenty resistors.

Now you can calculate the actual tempcos. With 49.9-kilohm resistors, 27 volts DC, and the bridge nearly balanced, each millivolt of change indicates that the test resistor changed by 7.393 ohms, or 148 PPM. Dividing the resistance change by the temperature difference gives us the tempco. Table 1 shows an example.

The resistors used in the prototype were listed in the catalog as 100 PPM, but the parts were marked 50 PPM when they arrived. It was only necessary to test twenty resistors to find three acceptable pairs. Overall, the resistors proved to be quite good, with tempcos spread on both sides of zero.

Select two resistors from your batch that have tempcos less than 5 PPM/°C, and that match within 0.2 PPM/°C. They should also be within 75 ohms of each other (10 millivolts of each other in the bridge).

If you are including the optional trim circuitry, you will need one additional resistor. From the remaining resistors that were tested, select the resistor nearest to 0 PPM/°C, and preferably below ±5 PPM/°C. This will be used for R3 in the voltage standard.

Although the resistors that you select in this manner will serve quite nicely for the voltage standard, you should not be mislead into thinking that they are the equal of an expensive wirewound part. The wirewound resistor will probably have better long-term stability, a lower voltage coefficient, and a variety of other advantages. Still, the selection process re-

PARTS LIST

All fixed resistors are RN55D or better, 1%, metal film.
R1—selected, see text
R2—2000 ohms, multiturn trimmer potentiometer
R3–R5—49,900 ohms (selected, see text)
R6—49.9 ohms

Capacitors
C1–C4—0.47 µF, 50 volts, metallized film

Semiconductors
IC1—LM340T15 voltage regulator, National or equiv.
IC2—LT1027BCH 5-volt reference, Linear Technology or equiv.
IC3—LTC1050CN8 amplifier, Linear Technology or equiv.

Other components
J1—2-terminal DC power connector
J2—5-way binding post, red (gold-flashed brass preferred)
J3—5-way binding post, black (gold-flashed brass preferred)
Miscellaneous: DC wall-mount adapter, 17–35 volts DC, PC board, case, solder, No. 18 AWG bus wire, resistors for resistor-selecting brige circuit.

Note: The following items are available from Conrad Hoffman, 4391 County Road #1, Canandaigua, NY 14424-9611; E-mail, 73260.2255 @compuserve.com; checks and money orders accepted.

- **Etched and drilled printed-circuit board—$15 plus $4 shipping and handling**
- **Calibration—$15 plus $4 shipping and handling**

ADDITIONAL ERROR-SOURCE INFORMATION

Error sources that are invisible in most circuits can assume huge proportions at the PPM level. Here's a quick summary of just a few of them.

Resistor temperature coefficient. Popular at one time, carbon composition resistors are little used today. With a typical tolerance of ±5%, a tempco of 1000 PPM/°C or worse, and poor long-term stability, it's not hard to see why they've been supplanted. The most popular resistor today is the carbon-film type, which are commonly available in ±5% tolerance and have a tempco around ±350 PPM/°C, depending on value. Although they are fine in non-critical circuits, they have no place in precision instrumentation.

The best easily obtainable resistor is the metal-film type. They tend to be very stable, low in noise, and have a tempco of ±100 PPM/°C in the normal T1 or "D" grade.

For the ultimate in tolerance, stability, and tempco, there are special wirewound and etched metal-foil resistors. Tolerances of less than .01% and tempcos better than 5 PPM/°C are available, but prices for such components start at several dollars apiece. Since they are mostly built to order, high minimum-order requirements and long lead times are the rule.

Wirewound resistors from the same wire lot tend to have well-matched tempcos. It would seem logical to expect metal film resistors from the same manufacturing lot to be well matched for tempco, but tests prove just the opposite. For metal-film resistors, expect both positive and negative tempcos of various magnitudes. If you need a close match, the parts must be tested.

You will also find that resistors typically undergo a small, permanent, value change when they are soldered. If you have spent several hours matching resistor values, be sure to use a heat sink between the body and the joint when soldering them, lest your work be wasted. Tempco is far less affected by soldering.

Leakage currents. Current leakage between traces and through poorly chosen capacitors can wreak havoc with precision circuits. Avoid these problems by keeping traces well separated, cleaning the board, and using only low leakage capacitors in critical locations. Polystyrene and most of the plastic-film capacitors are good choices. Sensitive IC pins and traces should be protected by guard rings where possible. Coating the board is beneficial, but only if it is clean and dry to begin with. If the coating traps moisture or contaminants, it will cause more trouble than it prevents.

When working with high excitation voltages, or attempting sub-PPM measurements, even wire insulation is important. Teflon or other low leakage insulation is recommended.

Thermal EMF. EMF is the abbreviation for electromotive force, the two dollar word for voltage. Thermal EMF refers to the small voltage generated where dissimilar metals touch, the Seebeck effect.

Imagine traveling through a typical circuit path. You first enter a copper wire and head towards the first dissimilar metallic junction (DMJ1), a solder joint. You leave the joint, but enter a copper trace of a different composition than the wire (DMJ2). You enter another solder joint (DMJ3), then a resistor lead (DMJ4). As you enter the resistor body, your compass jiggles, and you notice that the resistor end cap is made of steel (DMJ5). Back to the circuit board (DMJ6, 7, & 8), then through another solder joint, to an op amp with Kovar leads (DMJ9, 10). You haven't traveled far, but we have a plethora of dissimilar metallic junctions.

Now, think of every DMJ as a tiny temperature-controlled battery in series with your circuit.

Copper against Kovar will generate a thermal EMF of about 35µV/°C. One degree of difference between the reference leads times the gain of the following amplifier (2×) would result in a 70-µV error in the output of the voltage standard (7 PPM).

Fortunately, connections tend to come in pairs: two leads of a resistor soldered to a circuit board, two inputs of an op-amp, two 5-way binding posts, and so on. Kept at the same temperature, the small voltage produced at each junction will cancel out.

If the junction pair is not at the same temperature, a clever circuit designer will sometimes include an apparently unnecessary junction, just to cancel out the thermal EMF of a necessary junction.

Later in this series, you will see how bad these effects can get when you connect a sensitive null detector to a simple four-resistor bridge, then heat or cool one of the junctions. For now, be aware that plated banana plugs, plated alligator clips, and plug-in prototype boards are some of the worst offenders.

Very low thermal EMF connections can be made with brass or gold flashed brass banana jacks and ordinary copper magnet wire, plain copper "bell wire", or solid copper phone wire.

Stress-induced errors. Many components are sensitive to mechanical stress. The worst culprits seem to be epoxy DIP-packaged references. Manufacturers may publish great drift specifications, but check the fine print—they often apply only to the expensive metal or ceramic package.

Your technique is important. Never bend resistor leads while holding the resistor body. Grab the lead next to the body with long nose pliers, then bend the free end. The resistor should drop freely into the circuit board. Note that conformal coating the top of a board can increase the coupling of forces into the components, actually increasing drift problems.

Torsioning the circuit board can cause surprising stress in components, particularly ICs. It is often best to mount the board on three compliant supports to avoid warping it. Very little information is available on stress-induced errors, so experimentation is the order of the day.

Learning more. The techniques described here are quite specialized, and rarely mentioned in modern texts. Fortunately, older electrical engineering books went into great detail on various types of bridges and comparison methods. Many also had excellent sections on precision resistors, standards, meter design, and AC techniques. Check with used-book shops in your area. They often have early electrical engineering texts for just a few dollars. You will find that books written between 1900 and about 1950 are fascinating, and often better written than today's texts. In particular, look for any books relating to electrical measurement. Please remember to keep the information in the context of the year it was written, however. We are interested in adding to our knowledge, not regressing back to an earlier age!

For a fully up to date viewpoint, order Fluke's *Calibration: Philosophy in Practice*, shown in the references. It covers the history and current practice of calibration better than any other reference I've seen.

Another excellent book is Keithley's *Low Level Measurements*, also shown in the references. This is a very practical book, explaining all the low level error sources, and illustrating exactly how many types of difficult measurements should be made.

sults in a surprisingly good pair of resistors for the standard, and it takes some of the mystery out of passive component selection.

Building the standard

Figure 3 is the parts-placement diagram for the voltage standard. Hand wiring this project is not recommended, but if you do, be sure to follow the component layout and wire routing exactly as it is on the printed-circuit board.

Install the components, being

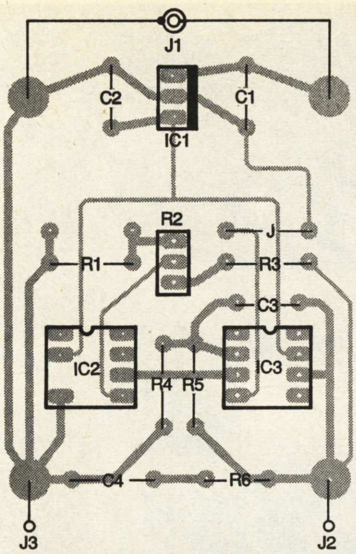

FIG. 4—PARTS-PLACEMENT DIAGRAM for the voltage standard. Make the connections to jacks J2 and J3 with No. 18 AWG bus wire.

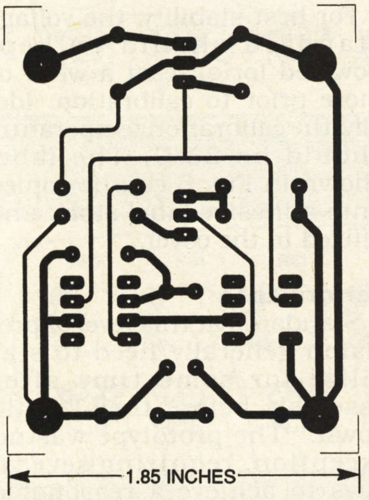

VOLTAGE STANDARD foil pattern, shown full size.

sure to observe the normal precautions when handling the ICs that are sensitive to electrostatic discharge (ESD). The tab of the LT1027 indicates pin 8. Do not install R1, R2, or R3 unless you are including the optional trim circuit. Do not use sockets.

Install a 1½-inch length of No. 18 AWG bus wire in each of the four large pads near the corners of the board. Be sure you have enough solder to complete the board from one batch, as mixing different lots or types of solder might cause thermal EMF differences between the joints.

Optional trim circuit

The trim circuit is optional because you will need access to a calibrated 4½ digit voltmeter to select the proper resistor. Install the 49.9-kilohm resistor that was selected earlier for R3, and install 2-kilohm trimmer potentiometer R2.

You will have to select R1 so the trim range passes through 10 volts DC. Be sure R2 is set to the center of its range. Temporarily attach a substitution box (or a trimmer potentiometer) in place of R1. Power the board and adjust the value of R1 until the output is exactly 10 volts DC, as measured on a calibrated 4½ digit DVM. The prototype required 18.82 kilohms, but yours may differ somewhat, depending on reference and resistor tolerances.

Install the closest standard 1% metal-film value for R1. The circuit board has pads to allow a parallel combination of resistors, if needed. Check that the trim range still passes through 10 volts DC, then recheck it after the unit has operated for a few days. The trim range is purposely narrow to allow an initial setting within 1 PPM.

Cleaning the PC-board

Remove all traces of flux with alcohol or other suitable flux remover. Next, wash the board with soap and warm water. Then scrub the solder side of the board—and accessible areas of the component side—with a nail brush or similar tool. Rinse the board thoroughly, and then dry it with warm air. There should be no visible streaking or contamination. If you can see any trace of flux or other deposits, repeat the cleaning process. Once the board is clean, handle it only by the edges to avoid depositing body oils on clean surfaces.

Mounting the board

The prototype was mounted in a die cast metal case, but plastic cases are acceptable, too. To keep mechanical stress low, three-point support is used. The board is mounted only by the bus wire connecting the binding posts, and the voltage regulator. Ordinarily this wouldn't be good practice, but the voltage standard's board is small and light, so it doesn't cause any problem. Keep the board close to the binding posts and use No. 18 AWG bus wire for low output impedance.

Mount the voltage regulator to a small aluminum block or piece of aluminum angle. The regulator must be electrically isolated from the block, so use a mica washer and a plastic screw. Attach the aluminum block or angle to the case's lid.

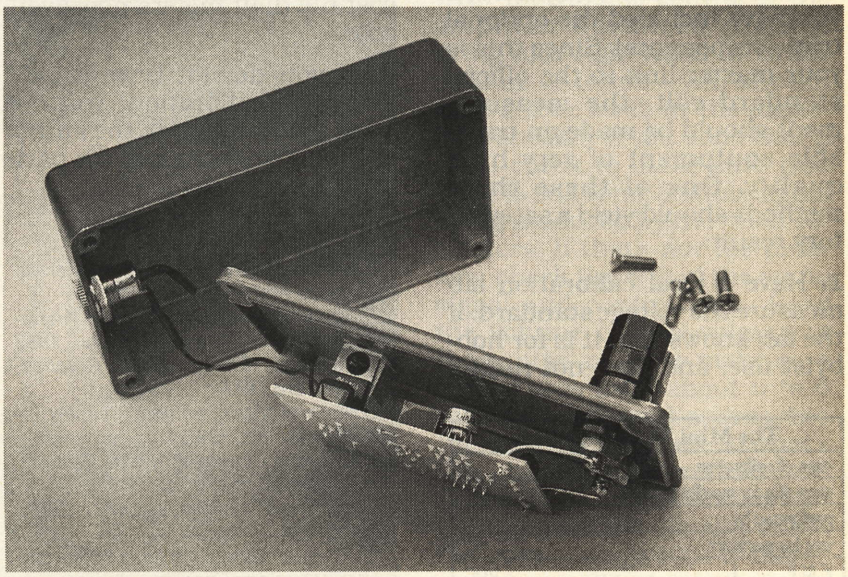

THE CIRCUIT BOARD is supported by the bus-wire connections to binding posts by the voltage regulator, which is attached to a small block of aluminum that is, in turn, fastened to the lid of the case.

Splurge on good quality five-way binding posts. They should be copper, brass, or gold flashed brass. Do not use ring lugs, but solder directly to the rear of the posts. You may have to use a larger soldering iron to get a good solder joint.

The correct center-to-center distance for a dual banana plug is 0.75 inches. If the distance is even slightly wrong, insertion will be difficult, and the plugs will eventually be damaged.

Power to the standard is provided by a wall-mounted DC adapter, preferably with a detachable DC power connector. The circuit requires between 17 and 35 volts DC. Unregulated wall adapters typically produce higher voltages when used below their rated load. Thus many "12-volt" units will happily provide the necessary 17 volts. Be sure to check the actual voltage under load, because the standard will not be stable or accurate if supplied with less than 17 volts.

Do not mount a power supply inside the voltage standard's case. An external, wall-mounted adapter was specifically chosen to keep heat and magnetic fields out of the voltage standard, either of which is apt to cause errors.

Calibration

The final step is to have the standard measured (adjusted, if you have included the optional trim components). Since this is your master link to the official standard volt, the measurement should be made on traceable equipment of very high quality. One of these three methods should yield a satisfactory result:

1. Have a local calibration lab measure the voltage standard. If the lab knows that it is for hobbyist use, and does not need a certificate of traceability, you might be charged less than for a commercial standard. Try to have the value read/set to ±10 μV (1 PPM) at 23°C. Be sure a firm price is agreed to before the work is started, and that it is understood what should be done if some problem prevents calibration—if the trim range is outside 10 volts DC, for instance.

The Mini Metrology Lab	
date of calibration	
date due for recalibration	
performed by	
test temperature	°C
E.M.F.	VDC

FIG. 5—CREATE A LABEL like this one and affix it to your standard.

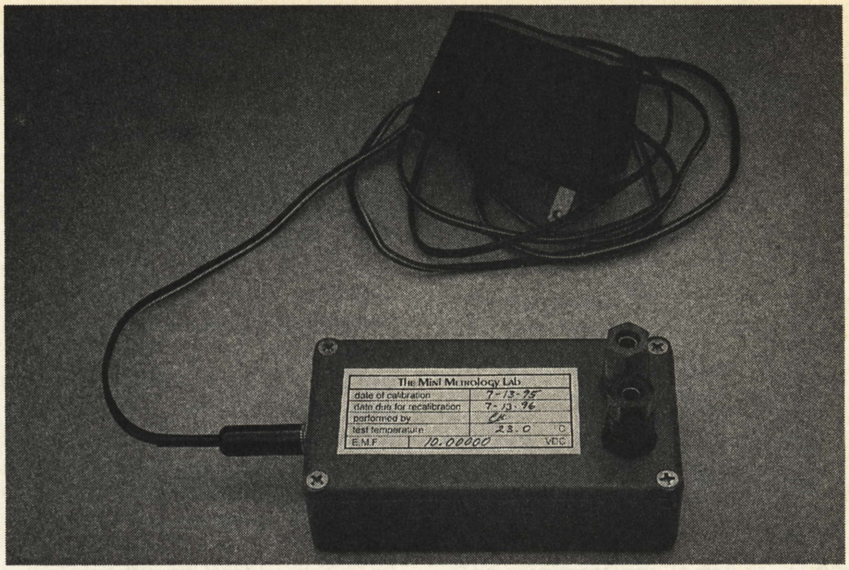

THE COMPLETED VOLTAGE STANDARD ready to serve as the first part of the Mini Metrology Lab.

2. Obtain access to a suitably accurate (and recently calibrated) meter and read/set the standard yourself. You or a friend may work for a company that has one of the new lower cost 6½ digit meters now available.

3. If you do not have a local source of calibration, you can send the standard to the author at the address given in the parts list. Calibration will take two to three weeks and costs $15..

REFERENCES

Basic Electrical Measurements, Melville B. Stout, Prentice-Hall, 1950
Electrical Measurements, Forest K. Harris, Ph.D., John Wiley & Sons, Inc., 1952
Calibration: Philosophy in Practice, Fluke Corp., 1994
Low Level Measurements, Keithley Instruments, Inc., 1992
IC Op-Amp Cookbook, Walter G. Jung, Howard W. Sams & Co., 1986
1990 Linear Databook, Linear Technology Corp.
1992 Linear Databook Supplement, Linear Technology Corp.
1993 Linear Applications Handbook, Volume II, Linear Technology Corp.

For best stability, the voltage standard should be kept powered for at least a week or more prior to calibration. Ideally, the calibration temperature should be 23°C. The label shown in Fig. 5 can be copied onto adhesive label stock and affixed to the cover.

Performance

Standards at this level of precision generally need to stabilize for some time after assembly before they "settle down." The prototype was no exception, requiring several days to achieve a reasonable drift rate. It was then given its first calibration. After that, daily comparisons were made against a temperature-controlled standard cell bank. The prototype showed a temperature coefficient of about −3 PPM/°C, and a drift rate of about 2 PPM/month.

The overall performance is excellent for a non-ovenized reference, and your unit should perform in a similar fashion if you assemble it carefully.

The next part of this series will present a sensitive null detector that you can build. It will allow you to match resistors for use in a Kelvin-Varley divider, and it will facilitate comparisons between other voltages and this standard. Ω

MINI METROLOGY LAB

Build a DC null detector/amplifier for your DVM as the second component of a mini metrology lab.

CONRAD R. HOFFMAN*

THIS THREE-PART SERIES BEGAN last month with a description and complete construction details for a precision voltage standard. To increase the utility of the standard, two additional pieces of equipment are required. First is a Kelvin-Varley voltage divider (KVD), to scale the value of the voltage standard to other voltages. Second is a null detector, to determine when the voltages are equal. However, because the null detector is required to build the KVD, it is this month's project.

A null detector—often called a null meter or a DC null voltmeter—is a very sensitive, center-zero voltmeter. When it is connected between two points, it indicates the magnitude and direction of any voltage difference by swinging its needle to the left or right. A good null detector can easily resolve one microvolt (one millionth of a volt), or less. Though generally calibrated and capable of making voltage measurements of either polarity, null detectors are usually used to determine equality between two points. As an example, a null detector is the ideal tool for measuring the voltage difference across a Wheatstone bridge. The more sensitive the null detector, the smaller the voltage difference that can be detected, and the more precisely the bridge can be balanced. See Fig. 1.

Design issues

At first glance, the design of a good null detector might appear trivial. After all, it's just a high-gain amplifier followed by a meter. But let's look a bit closer.

CMRR: The first issue is common-mode rejection ratio or CMRR. A null detector is often called upon to make comparisons at both high and low voltages. It is essential that the meter's zero point does not shift between these two conditions. Although a differential amplifier could be designed to do the job, its passive-component stability would have to be exceptional. The issue of CMRR is avoided in this design, which is based on a floating, single-ended amplifier.

Leakage and ground loops: At the microvolt level, any leakage or voltage generated by ground-loop current causes errors. Again, floating the amplifier eliminates that issue as a concern: With no ground, there can be no ground currents!

Drift: Chopper stabilization is *de rigueur* in all commercial null detectors. It prevents the zero point from drifting during

---

*Thanks to Jim Williams and Mark Gordon of Linear Technology Corporation for their assistance with the design of the Mini Metrology Lab.

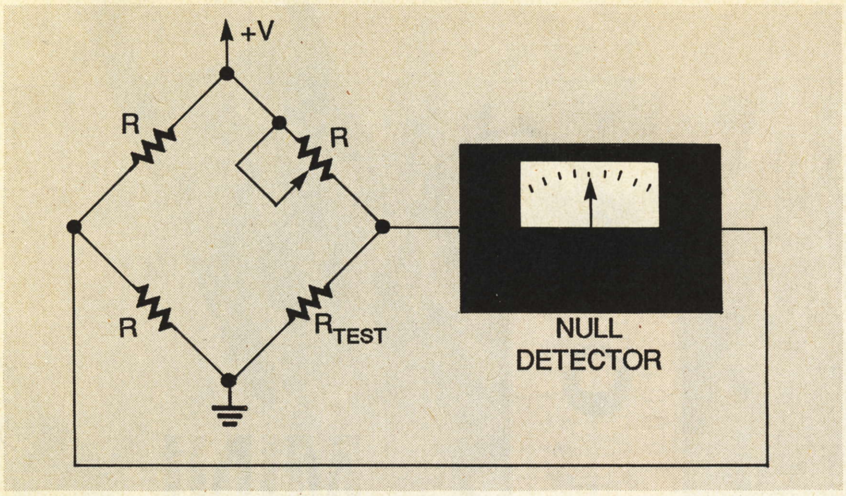

FIG. 1—A NULL DETECTOR can be used to verify that a bridge is in balance.

use, even on the lowest ranges. At one time, chopper stabilization required elaborate discrete designs. The classic Hewlett Packard 419A chopper circuit used flashing neon bulbs and photocells. Other designs used vibrating reed relays. Today a high performance chopper stabilized amplifier in an 8 pin mini DIP can be bought for less than five dollars, so there is no excuse for not using one. One caveat: These amplifiers have an absolute maximum power supply voltage of +9 volts.

Protection: Because null detectors have high sensitivity, and are used around, relatively speaking, large voltages, they are often severely overloaded. No damage should occur under any reasonable overload.

Input offsets: The null detector should indicate the same reading for both high- and low-impedance sources. Very low input offset current specifications, plus good circuit layout, will accomplish this.

A real-world design

To keep the cost low and the performance high, the null detector is designed as a "front end" for a battery-operated digital voltmeter or DVM. You might be skeptical that a digital display can be used easily in this application. However it has proved entirely satisfactory. Better yet, the digital display eliminates any worries about pivot friction or "sticky" needles—an all too common problem with older meters.

The null detector is based on the Linear Technology LTC1050 amplifier. Chopper stabilized, it provides performance that is almost drift-free. The low-frequency gain is guaranteed to be over 130 dB, so only one amplifier stage is needed. Input bias and offset currents are in the picoampere region and, finally, the sample-and-hold capacitors have been incorporated within the amplifier, further simplifying the null detector's design.

The circuit must be battery powered, but there are no cells that give us reasonable positive and negative supply values. The answer lies in the TI2426 "rail splitter" ground IC. Using this special divider/buffer, a standard nine-volt battery will provide 4.5 volt supplies—perfect for the CMOS chopper amplifier.

Continued on page 69

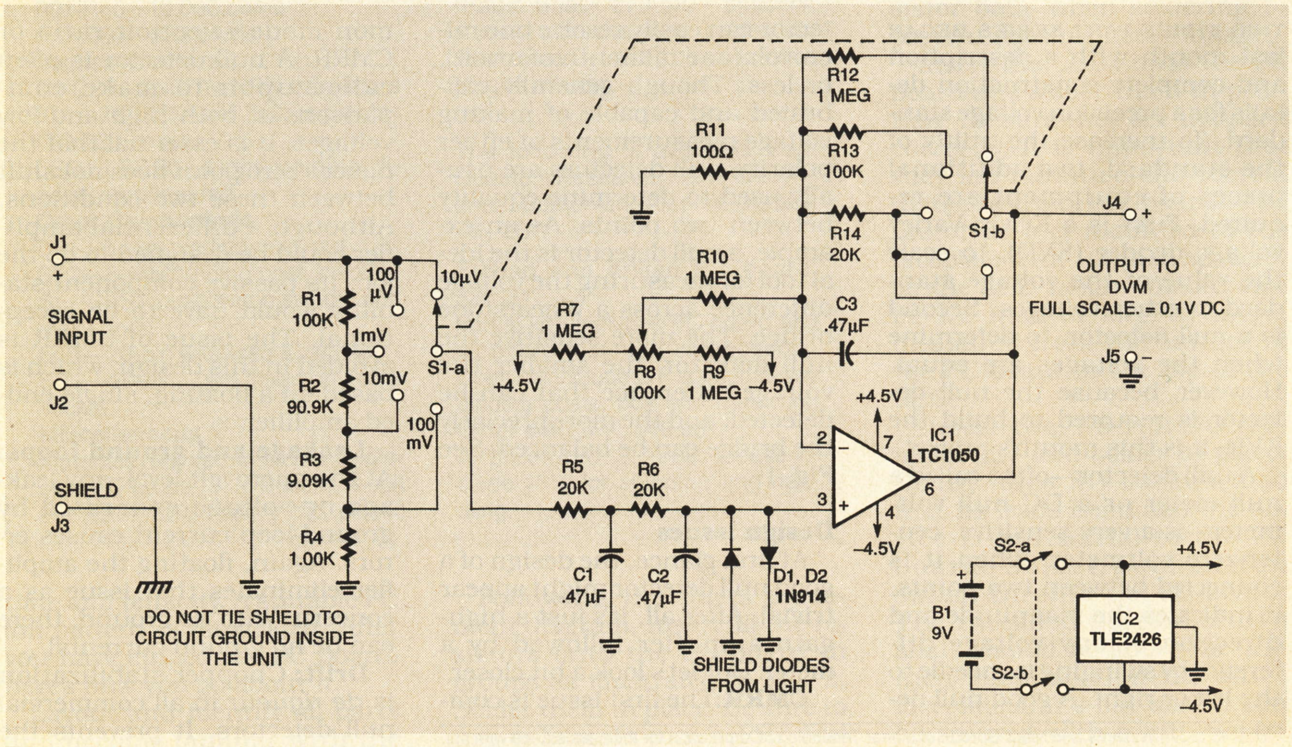

FIG. 2—NULL-DETECTOR SCHEMATIC. A 9-volt battery, in conjunction with rail- splitter IC2, forms the power supply.

METROLOGY LAB

continued from page 34

Commercial null detectors usually cover a voltage range of 1 microvolt to 1000 volts. This makes the range-switching circuit quite complex because both the input attenuation and amplifier gain must be switched. In practice, the higher voltage ranges of a null detector are rarely used, so the input of this detector is limited to a maximum of 100 millivolts. That not only reduces the circuit complexity, but also the parts cost. Above 100 millivolts, your DVM alone is all you need.

The most sensitive range is 10 microvolts, full scale. This allows the detector to resolve 1-microvolt differences with no difficulty. The input impedance will be 200 kilohms for normal "in-range" signals, falling to a minimum of 40 kilohms under overload conditions.

The limiting factor is the voltage rating of the first input-filter capacitor, which runs at about 1/2 the input voltage, under overload conditions. Figure 2 shows the schematic for the null detector

Assembly

The circuit is quite forgiving of construction and layout, since it only responds to very low frequencies. Still, using a circuit board helps to reduce wiring errors, and will result in the most stable and reliable null detector. A circuit-board layout is provided here. Figure 3 is its parts-placement diagram.

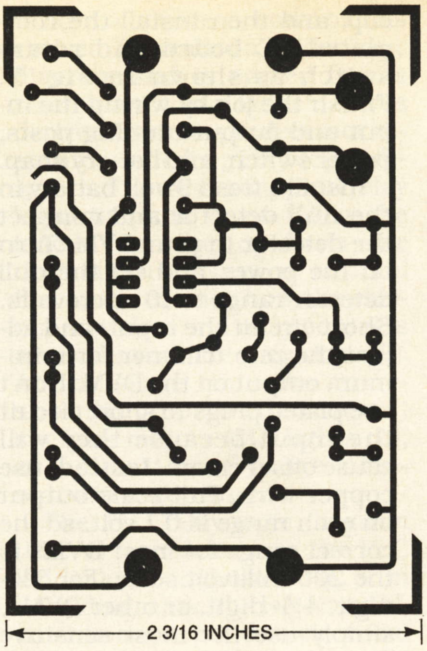

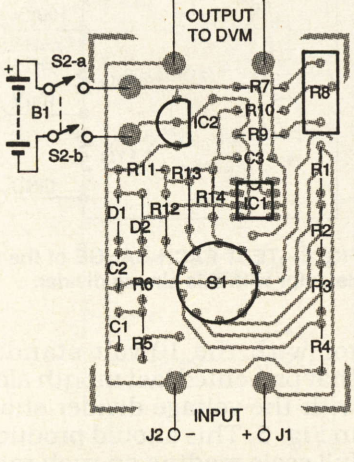

FIG. 3—PARTS-PLACEMENT DIAGRAM. Be sure to verify that your rotary switch confirms to the schematic.

You will need a two-pole, five-position, rotary switch for S2, the range control. Almost any two-pole wafer type switch will work, because most of them allow you to set a hardware stop to limit the number of positions.

Note that the two pads for the switch wipers are not in line with the switch terminals. They must be wired around the switch to the correct terminal. The circuit board is supported entirely by the switch wiring. Install the circuit board on the switch last, to allow for positioning and alignment. Check your switch with an ohmmeter to be sure that your wiring matches the schematic.

Install the components as shown in Fig. 3, taking the usual precautions to protect against electrostatic discharge (ESD)—the LTC1050 is a CMOS device, and can be damaged by ESD. Do not use sockets, because they will contribute to thermal-EMF errors. When all the components have been mounted on the PC board—including the connecting wires—clean off all flux residue with a suitable remover. Also scrub the solder side of the board with soap and water, rinse it, then dry it with warm air. After cleaning, handle the board by the edges to avoid fingerprints.

Use a metal chassis, and wire the input and output connections as shown in the schematic. Do not make any connection from the null detector circuitry to the chassis. The null detector should be floated independent of its chassis, and a chassis ground connector should be provided at the input. This allows you to tie the null detector's chassis to the shield of the circuit being measured, if required.

The protection diodes on the amplifier input are slightly photosensitive at these high gains, so a light-tight chassis is also

PARTS LIST

All fixed resistors are RN55D or better 1%, metal film.

R1, R13—100,000 ohms
R2—90,900 ohms
R3—9090 ohms
R4—1000 ohms
R5, R6, R14—20,000 ohms
R7, R9, R10, R12—1,000,000 ohms
R8—100,000 ohm multi-turn trimmer potentiometer

Capacitors

C1, C2, C3—0.47 µF, 50 volts, metallized film

Semiconductors

IC1—LTC1050CN8 op-amp
IC2—TLE2426 "railsplitter" virtual ground
D1, D2—1N914 or similar

Other components

J1, J4—5-way binding posts, red, gold flashed brass preferred
J2, J3, J5—5-way binding posts, black gold flashed brass preferred
S1 2-pole, 5-position rotary switch
S2 SPST or DPST switch
Miscellaneous:PC board, 9V battery snap w/ leads, 9V battery clip 9V battery, case, solder, hookup wire

Note:The following are availble from Conrad Hoffman, 4391 County Road #1, Canandaigua, NY 14424-9611; E-mail : 73260.2255 @compuserve.com:

- **Printed circuit board, $15 plus $4 shipping and handling. Checks and money orders accepted only.**

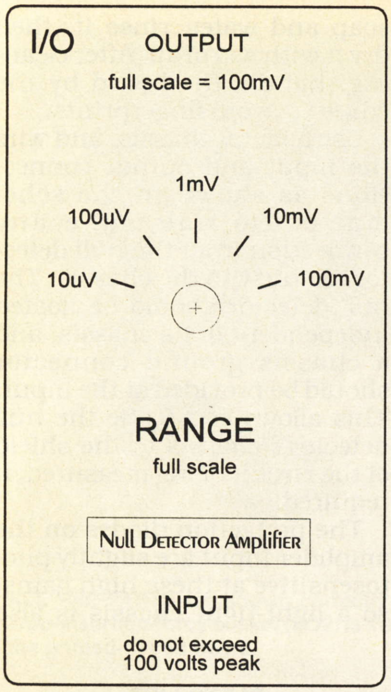

FIG. 4—FRONT PANEL suggested layout.

required. Follow the general layout of Fig. 4 to create a cover decal.

Mount the five binding posts, the power switch, and battery clip, and then install the completed PC board and rotary switch as shown in Fig. 5. Finish the job by wiring the input and output binding posts, power switch, and battery snap.

Install a fresh 9-volt battery in the null detector and connect the detector to your DVM. Turn on the power, and set the null detector range to 10 microvolts. Short circuit the input, and adjust the zero trimmer for minimum output on the DVM. Don't use plated plugs to short circuit the input because they will cause offset errors. Instead, use copper wire. Full-scale output on each range is 0.1 volt, so the correct range for most DVMs is the 200-millivolt scale. For 3¾-digit, 4½- digit, or other DVMs, simply use the most sensitive scale that still includes 0.1 volt. You may prefer to lock your autoranging DVM in the appropriate range, because automatic range switching can be somewhat confusing if used with the null detector.

You can make a quick check of each range of the null detector with the 10-volt standard that presented last month along with the voltage divider shown in Fig. 6. This should produce a full scale reading on each range of the null detector.

Continued on page 78

THE GALVANOMETER

From the mid 1800s, galvanometers were used for null detection. They were basically d'Arsonval meter movements with very delicate suspensions, often a finely drawn quartz fiber. Since there were no amplifiers at the time, the making of sensitive galvanometers was raised to a high art.

Typically, a small mirror was used instead of a pointer. A focused beam of light was then reflected off the mirror to a paper target several feet away. This optical lever amplified the slightest motion of the mirror to the point where it was visible.

Naturally, a mechanism this delicate was easily damaged. Rough handling, or even a brief over-voltage condition was usually fatal. Galvanometers were awkward, they had to be carefully leveled, and had fairly low impedances. The coil resistance varied from less than twenty ohms to a few thousand ohms at best.

Electronic null detectors relegated the galvanometers to history because they have far better sensitivity, higher impedance, and they are better suited to the rigors of daily use.

Today, however, few null detectors remain on the market. High resolution DVMs can do the same job for all but the most specialized needs.

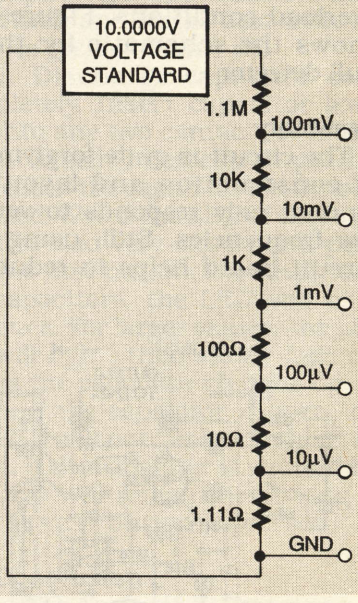

FIG. 6—TEST EACH RANGE of the null detector with this simple divider.

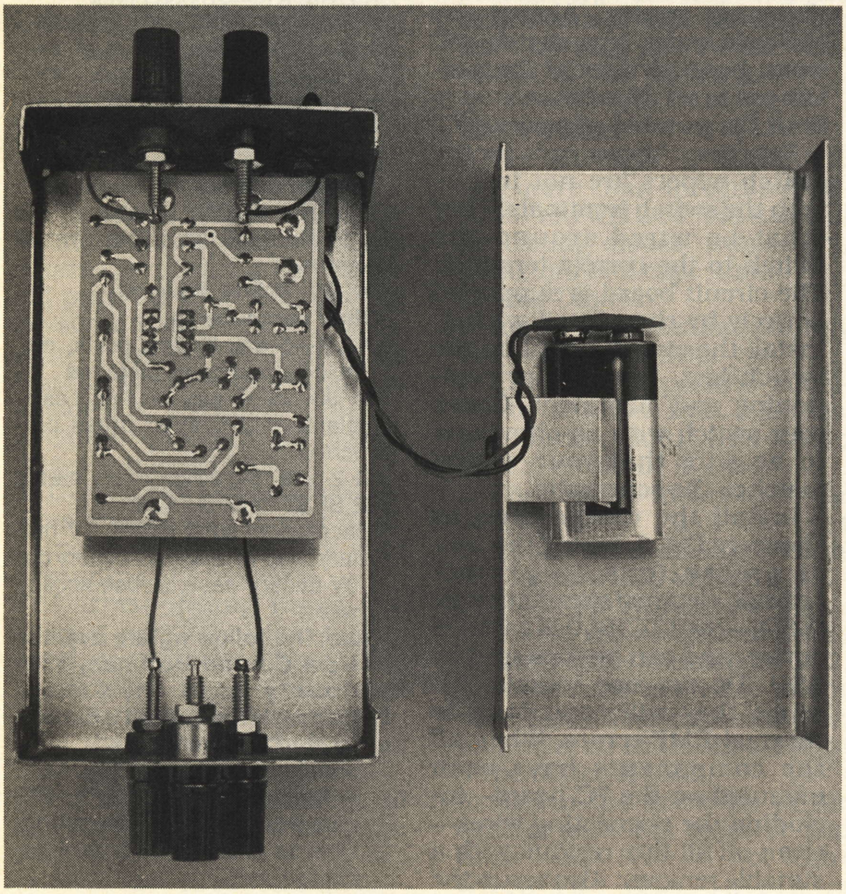

FIG. 5—ASSEMBLED CIRCUIT BOARD is mounted in its case.

WIDTH option on switch S4 is intended only for rectangular pulses because the 0.9-volt reference will not permit accurate measurements of sine, triangular, or similar waveforms unless the TIME PERIOD function is toggled on S4.

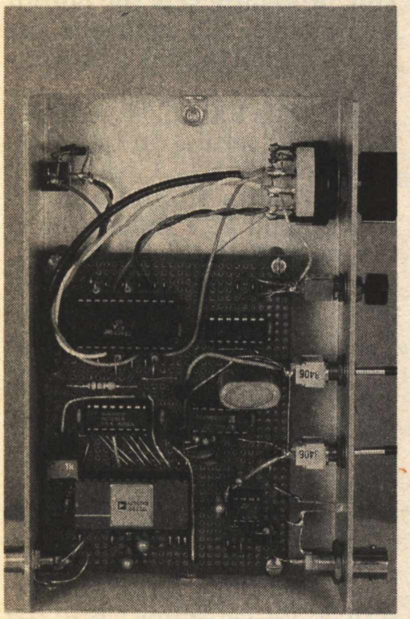

THE PROTOTYPE ADAPTER was built using point-to-point wiring.

Dual power supply

If you do not have a suitable ±15-volt power source, you can build the circuit whose schematic is included in this article. This supply can be built by point-to-point wiring on a 2×3-inch piece of perforated circuit board following accepted practice. It can be mounted within the project case on appropriate standoffs, or it can be packaged in a small project case for AC-line outlet mounting.

The author packaged the completed circuit board in a two-part aluminum project case that measured 1 1/22×4 inches with an external, two-prong AC line plug mounted on the outside. Ventilate the case by drilling a series of holes in the top cover of the case. A pattern of holes ⅛-inch in diameter covering about 1 square inch in the center of the cover will be satisfactory. Alternatively, place a factory-made perforated or screen cap about 1-inch in diameter over a 1-inch diameter hole formed in the cover. Ω

METROLOGY LAB

continued from page 70

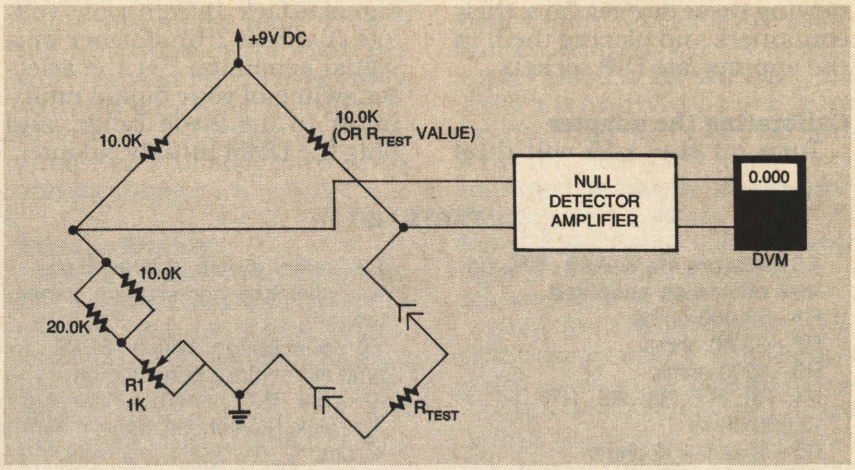

FIG. 7—THIS COMPARISON BRIDGE will let you get started with your null detector.

A bit of practice

There are many uses for your new null detector, but as a warm up for Part 3 of this series, you might like to investigate resistor stability. Build the Wheatstone bridge shown in Fig. 7 on a scrap piece of perfboard. Use a multi-turn potentiometer, or the bridge will be impossible to zero. This is a comparison bridge for resistors of close value—10 kilohms in this case.

Now, find as many different kinds of 10-kilohm resistors as you can. be able to compare resistors of the same type, but made by different manufacturers.

One by one, install them in the bridge and zero it. Notice the change in value as you warm them slightly with your fingers, or a hot air gun. Don't warm the bridge, because we don't know anything about the components used to build it. Also, try to detect the difference between thermal EMF errors caused by heating one end of the resistor, vs. the whole body. Try soldering a piece of wire near the resistor body and see if there is a permanent change in value.

You can also test the stability of a trimmer potentiometer compared with a fixed resistor.

You will quickly learn that all resistors are not the same, and you will have a better understanding of how to choose from the various types. You may even conclude that passive components aren't all that passive!

This little resistor exercise should get you ready for the next project, which is a Kelvin-Varley voltage divider. Ω

MAKING YOUR OWN RAIL SPLITTER

The TI2426 "rail splitter" virtual-ground IC makes it possible to run the null detector from a standard 9-volt battery. Although it would be possible to use a voltage divider built from passive components to create a dual power supply, any practical resistor values would cut battery life dramatically.

The Texas Instruments "rail splitter" is just a high value voltage divider with an op-amp follower to provide a low impedance ground. It is possible to do the same thing with discrete parts, but you'll sacrifice board space because you won't be able to fit it all in a nice TO-92 transistor case!

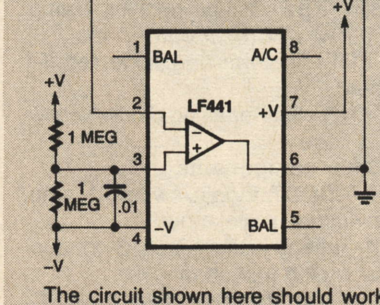

The circuit shown here should work fine. You must use a low-power op-amp, of which there are many to choose from. The National LF441 is a good, inexpensive choice (don't confuse it with the 411). Pin 6 is the virtual ground "output".

This circuit will work correctly down to a battery voltage of about six volts. The current consumption is about 160 microamperes.

MINI METROLOGY LAB

Build a Kelvin-Varley voltage divider to complete the mini metrology lab.

CONRAD R. HOFFMAN

THE FIRST TWO PARTS OF THIS SERIES showed how to build a voltage standard and a null detector. This final article shows how to build a precision voltage divider to complete the mini metrology lab. The voltage divider is a key component of the measurement lab because it allows both larger and smaller voltages to be compared to the voltage standard. It can also act as one side of an ultra-precise resistance bridge, allowing many different values of resistance to be compared to a single known resistance standard.

Of the many types of divider schemes, the Kelvin-Varley divider (KVD) is one of the most useful and desirable because it combines both superb ratio accuracy and high resolution. Found almost exclusively in calibration labs, the KVD is used for the most critical calibrations and measurements.

Commercial KVDs are often accurate to 1 part per million (PPM) or even 0.1 PPM. Unfortunately prices for commercial units start at about $4000, and can easily exceed $10,000. The cost of precision wirewound or bulk metal-foil resistors, multideck switches, and substantial hand labor, conspire to keep commercial KVDs beyond the reach of experimenters.

So can you build a decent KVD without breaking the bank? Absolutely! We'll get into the details shortly, but here are a few specifications to whet your appetite. Our KVD is a full six-decade device, just like the commercial ones. It will resolve 1 PPM. Though the design goal was an absolute accuracy of 20 PPM or .002%, the prototype was twice as good—it was better than 10 PPM at all settings! The total cost of the project is under $75, but a well-stocked junk box can reduce that substantially.

How does it work?

The best way to understand how a Kelvin-Varley divider works is to look at just one decade, shown in Fig 1. There are 11 resistors in the main divider string, but two of them are in parallel with the output divider, in this case, a potentiometer. The value of the output divider is chosen so that the parallel combination of it and the other two resistors is equal to one step of the main divider. Thus, the circuit is the equivalent of a simple ten-resistor divider.

No matter where on the main divider the output divider is placed, the circuit that results is always a ten-resistor divider. Since the output divider is a potentiometer, any voltage between the two tap voltages can be selected.

The simple output divider (potentiometer) can be replaced by another decade constructed in the same manner as the first.

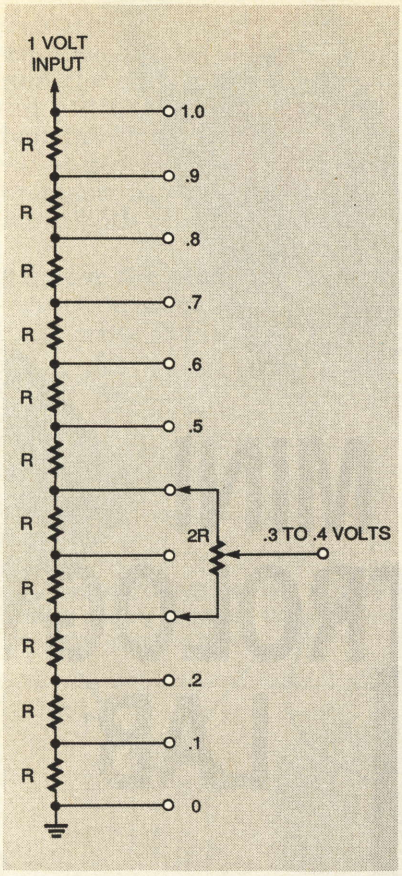

FIG. 1—A SINGLE KVD DECADE. Note that the circuit is equivalent to a 10-resistor divider.

The decade must, of course, have a total resistance equal to twice the resistor value used to construct the first decade. Each additional decade increases the *resolution* by a factor of ten. In theory you can add as many decades as you want, but the divider *accuracy* is always limited by the first decade.

The last decade is a simple ten-resistor divider, since there is no divider in parallel with any of its elements. The top position is the "carry" position, so full output from the KVD will be 9-9-9-9-9-10. Sometimes, a potentiometer is used for the last decade, giving continuous resolution over the full range of the divider.

Figure 2 shows the full KVD configuration. Trimmer networks have been added so that any decade can be shunted to the correct total value. That way you have to be concerned only with resistor matching, not exact resistor values.

You might notice that the resistor values used in each decade set an absolute minimum value for the following decade. The traditional series is 10K, 2K, 400, 80, 16, and 3.2 ohms, with no shunts. This KVD is designed to use standard value resistors, and to have reasonable value shunts. Thus, the values are somewhat different. Remember, you can only shunt a decade one way—down!

PARTS LIST

All fixed resistors are metal film, RN55D, 1%, or better. See text for selection process.

R1–R11—10,000 ohms, selected
R12–R22—2050 ohms, selected
R23–R33—412 ohms, selected
R34–R44—100 ohms
R45–R65—24.9 ohms
R66—806,000 ohms
R67—825,000 ohms
R68—4220 ohms
R69—499 ohms
R70—100 ohm multiturn trimmer
R71, R72—50,000 ohm multiturn trimmer
R73, R74—1000 ohm multiturn trimmer

Connectors

J1–J6—12 Pin Header, Molex 26-48-1121
P1–P6—3-Position Connector, Molex 09-50-8031
J7,J8—5-way Binding Posts, Red
J9,J10—5-way Binding Posts, Black

Miscellaneous

Terminals, Molex 08-52-0072, (Digikey WM2302-ND), case, small rubber grommets, epoxy, hot glue or cyanoacrylate, hookup wire, 22 AWG, insulated, multistrand (two colors required) 9V batteries (3), resistors for comparison bridge (2K, 49.9K), trimmer potentiometer for comparison bridge (1K, multiturn), brass strip (.015" thick, or similar)

Note: For those needing lower temperature coefficient and greater stability, precision bulk metal foil resistors can be ordered in small quantities from: Vishay East, #1 Precision Place, Hagerstown, MD 21742; (301) 739-8722 or Vishay West, 3431-I Pomona Blvd., Pomona, CA 91768; (909) 594-6737. High quality ceramic rotary switches are available for this project from the author. Please inquire as to price and availability: Conrad Hoffman, 4391 County Road #1, Canandaigua, NY 14424-9611; E-mail 73260.2255 @compuserve.com

Design issues

One of the biggest problems in designing this project was finding an affordable way to do the switching. Older KVDs used unique rotary switches which had dual multiple leaf wipers and large brass lugs for contacts. The high contact pressure resulted in very low resistance. Most modern KVDs use high quality two deck wafer switches. Unfortunately, the old switches are no longer available, and the modern replacements are quite expensive. However, the switch design presented here will fit anyone's budget- the "switches" cost just over a dollar each!

The decade resistors are mounted on six twelve-pin headers. Switching is done by moving a plug up and down the header. A three-hole plug is used, with only the end holes connected to the next decade. The physical layout very much resembles the schematic, helping to reinforce the principles of KVD operation. It is also reminiscent of early dividers and bridges that used brass plugs to make connections between adjacent resistors.

The other design issue is the type of resistors to use. Wirewound or bulk metal-foil resistors would be ideal, but they would cost several dollars each, pushing the cost of the KVD out of many people's reach because of the tolerances and quantities required.

The best easily obtainable resistor is the 1% metal-film type. Its temperature coefficient or tempco is not the best, and its stability isn't well characterized, but those factors can be worked around. If the resistors are selected carefully, and they are put to work over a reasonable temperature range, they can provide quite acceptable performance. However, it is important to check the ratio accuracy occasionally. Although I had some doubts about at-

Continued on page 74

METROLOGY LAB

continued from page 40

tempting this project with commonly available resistors, the results have been excellent.

Selecting resistors

You must select resistors for the divider out of a batch of ordinary 1% metal-films devices. Even though 1% is more than two orders of magnitude worse than what we need, any given bag of 200 resistors is almost certain to contain at least one suitable set, and usually more than one.

The process of selecting eleven resistors that are matched to better than 40 PPM is not difficult, merely tedious. To make the job as easy as possible, you can build a comparison bridge with "quick insertion" clips, just like commercial bridges use.

A simple comparison bridge circuit is shown in Fig. 3. Build it on some scrap perforated construction board, and be sure to use a multi-turn trimmer potentiometer, or the bridge will be impossible to zero. The resistor clips are made from .015-inch brass, cut with scissors and bent with needle nosed pliers. Drill the brass strips, deburr them, then clean them with steel wool before bending.

Bridge power is supplied from three 9-volt batteries in series. The best detector is the null detector described last month. However a DVM that can resolve 0.1 millivolt is also acceptable. With a resistor installed on the clips, you should be able to zero the bridge by adjusting the trimmer potentiometer. Note

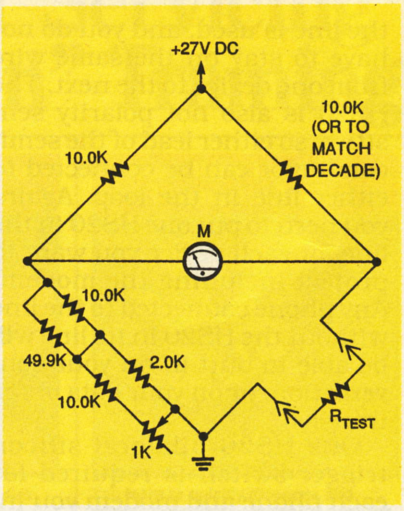

FIG. 3—BUILD THIS COMPARISON BRIDGE to match resistors for the KVD.

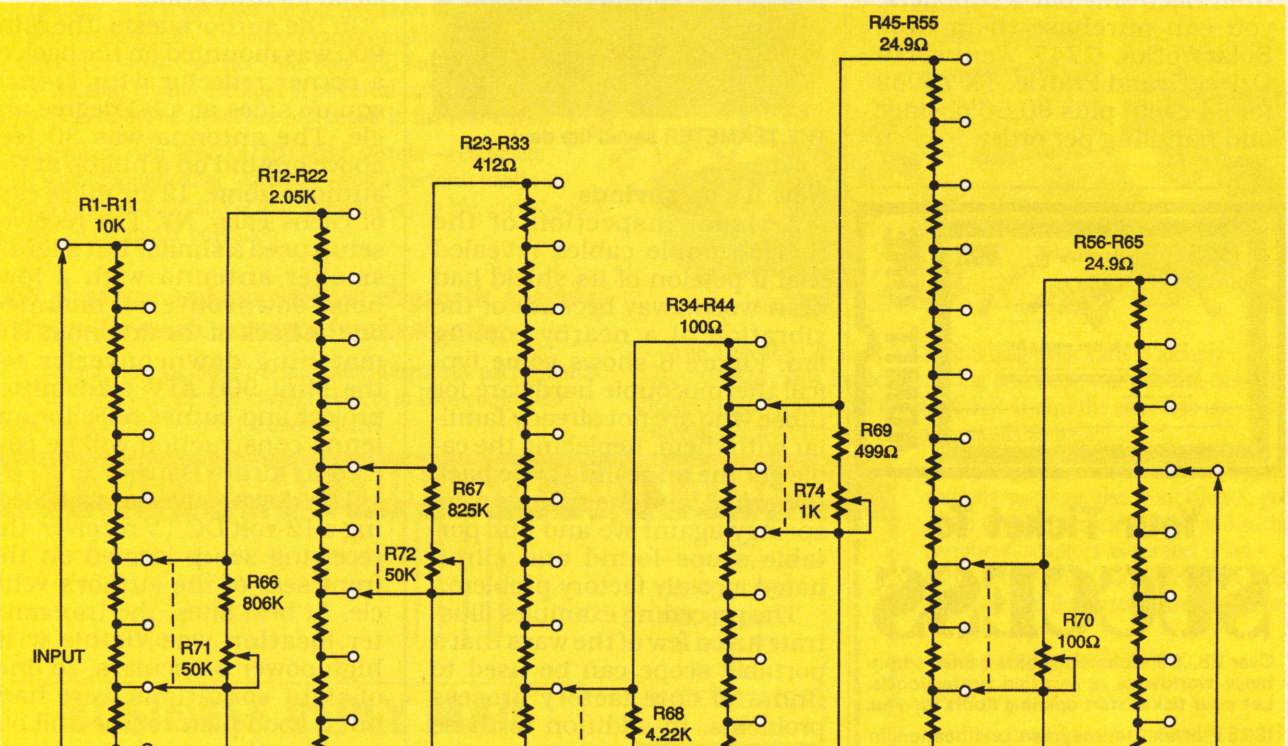

FIG. 2—THE COMPLETE KELVIN-VARLEY DIVIDER. The setting shown equals 0.45187.

that it takes 10–20 seconds to get a stable reading to the precision you need.

The first order of business is to get an idea of the average value of your resistors, and sort them into roughly matched groups. Since all of the resistors have values within 1%, the bridge will be nearly balanced at all times. You will not have to rezero it; instead, just read the deviation on the null detector (or DVM). The bridge has a very narrow range of adjustment. You might have to pad one of the upper legs slightly if it won't zero.

An excellent way to keep track of the resistors is to use a piece of perforated construction board as a sorting board. Put a piece of masking tape on the long edge and label the holes. Start with zero in the center, then 10 millivolts per hole, going outwards from zero each way. Minus should be on the left. You will soon see where most of the resistors fall, and can re-zero the bridge to put this value in the center. I find that a four by six inch board is enough. If the average value is near the center, resistors off the edge are unlikely to match, and can be put aside.

Measure each resistor, put it into the appropriate hole in the sorting board. As you test more and more resistors, the sorting board becomes a visual histogram of the resistor values!

With luck, there should be several columns with high numbers of resistors. Separate these columns, combining them with the columns on either side. Measure these resistors again, increasing the sensitivity of the detector, and sorting them every 1/2 millivolt. From adjacent columns, it should be possible to find 11 resistors that are all within 1/2 millivolt of each other, and hopefully, a few spares. No doubt there will be a few people who don't "win" on the first bag of resistors. If this is your fate, either order another bag, or live with a bit lower accuracy.

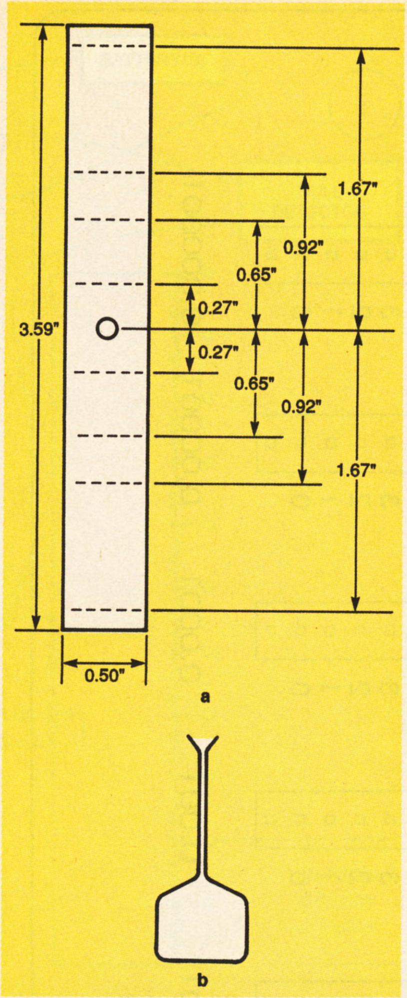

FIG. 4—BEND A 0.015-inch BRASS STRIP as show to form a clip for inserting resistors into the comparison bridge.

Once you have resistors for the first decade selected, remeasure them a few times until you have confidence that all the parts are within a 1/2 -millivolt window. Congratulations, the hardest part is over!

Select the resistor sets for each subsequent decade in the same manner. You will have to change the reference resistor in the bridge for each value. The required match for each succeeding decade becomes less critical. The last three decades don't require matching, but I like to check them on a DVM just to be sure they are close. See Table 1 for values and matching requirements.

Assembly

The connector headers are epoxied to the top panel of the enclosure. I used a piece of phenolic sheet, but a piece of circuit board material would work equally as well. ·Remove the copper by etching or peeling it off.

Figure 5, a 1:1 copy of the panel layout, makes a handy drill template. Just tape a copy of it in position on the panel, then use a center punch to mark the holes. Drill on the punch marks. Clean everything carefully, then epoxy the connector headers in place. Try to keep the epoxy off the pins. Small rubber grommets in the wire exit holes will protect the wires and give the unit a more finished appearance.

Solder the decade resistors to the underside of each header as shown in the photo. Since excessive heat can change the resistor values, be sure to leave the leads long and heat-sink each lead while soldering. A pair of long nose pliers can be used as a heat sink.

The padding networks are at-

TABLE 1—MATCHING REQUIREMENTS

KVD Decade	Resistor Value	Resistor Match	Bridge Offset with 27V Applied	Padding Network (Typical)	Padded Value
1	10KΩ	±0.0037%	±0.25 mV	-	-
2	2.05KΩ	±0.037&	±2.5 mV	820K (806K+50K pot)	20K
3	412Ω	±0.37%	±25 mV	844.6K (825K+50K pot)	4.1K
4	100Ω	±1%	-	4.68K (4.22K+1K pot)	824Ω
5	24.9Ω	±1%	-	1.01K (499Ω+1K pot)	200Ω
6	24.9Ω	±1%	-	62.25Ω (100Ω pot)	49.8Ω

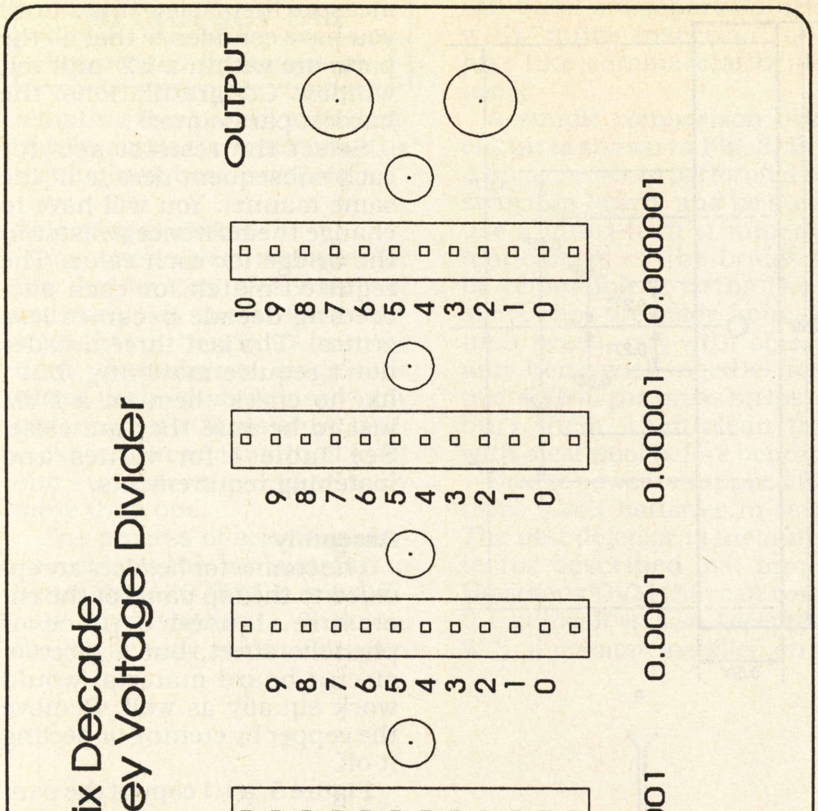

FIG. 5—THE KVD FRONT PANEL makes a handy drilling guide. It is shown full-size here.

tached across the full decades, and can be held in place with a drop of hot glue or epoxy. Each decade connects to its plug via a 6" twisted wire pair. Since the plugs are reversible, use two different colors of wire to avoid confusion. The plug for the last decade uses only one wire, so you may want to saw off the unneeded portion. Also, cut off the unused header pin from the same decade.

If you build a KVD using rotary switches, you will have to work out the connections for the particular switches you use. Generally, the resistors will be mounted in series around one of the decks, and the other deck will be wired in parallel, but offset by two positions.

Adjustment

The final step is to adjust the padding networks. This step has the potential to be confusing, so study the figures and instructions carefully. What you will do is attach clip-leads to turn each decade into a Wheatstone bridge, with the previous decade included as one of the bridge's arms. It is then a simple matter to adjust the previous decade and null the bridge.

This technique isolates each decade, and is the only way to accurately adjust the KVD. Do not attempt to adjust the decades with an ohmmeter, because it is not accurate enough, and the multiple current paths will give incorrect readings. Note that the voltages used are common battery voltages, if you don't have a suitable power supply handy.

1. Start with the output decade (No. 6). Attach power supply, the null detector, and a shorting lead to decade No. 5, as shown in Fig. 6. Because the resistances are low, do not apply more than 3 volts DC. Adjust the trimmer network on decade No. 6 for null.

2. Shut off the power and carefully move all of the clip-leads to the next decade (No. 4). Apply 3 volts DC and adjust the trimmer network on decade No. 5 for a null reading.

3. Move to decade No. 3 and adjust the trimmer network on decade No. 4, using about 9 volts DC.

4. Move to decade No. 2 and adjust decade No. 3, using about 18 volts DC.

5. Finally, move to decade No. 1 and adjust decade No. 2. Use 27 volts DC and make this adjustment as carefully as possible.

6. Recheck all the decades until you are confident that they are stable and correctly adjusted.

7. Finish up by installing the KVD in its enclosure

Making precision measurements

The simplest application of the KVD is to measure voltages from zero up to the value of your voltage standard. The setup is shown in Fig. 7. Adjust the KVD settings until the null meter reads zero, then multiply the KVD reading times the exact value of the voltage standard.

Warning: Because the divider connections are exposed, do not use this divider with high voltages (above 40 volts), as there would be a risk of shock.

Using the voltage standard from the first installment of the series, this setup will easily check or calibrate the references used in 14-bit digital systems.

Remember: *The KVD is only accurate if no current is flowing in the output leg*. Thus, it is always used for null measurements, never as a source of current. For example, you cannot accurately measure the output of the KVD with a voltmeter, because the resistance of the meter would form a divider with the KVD, lowering the voltage slightly.

To measure voltages higher than the voltage standard, you can divide them down with the KVD, then null to the voltage standard. See Fig. 8.

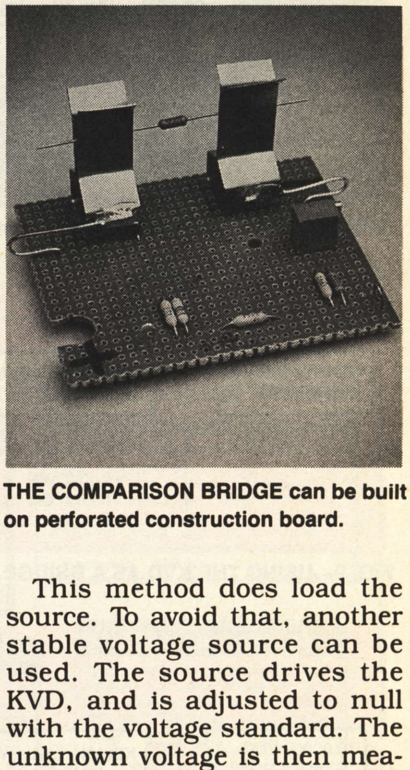

THE COMPARISON BRIDGE can be built on perforated construction board.

This method does load the source. To avoid that, another stable voltage source can be used. The source drives the KVD, and is adjusted to null with the voltage standard. The unknown voltage is then measured as in Fig. 7, but with the higher temporary standard.

The KVD can also be used as

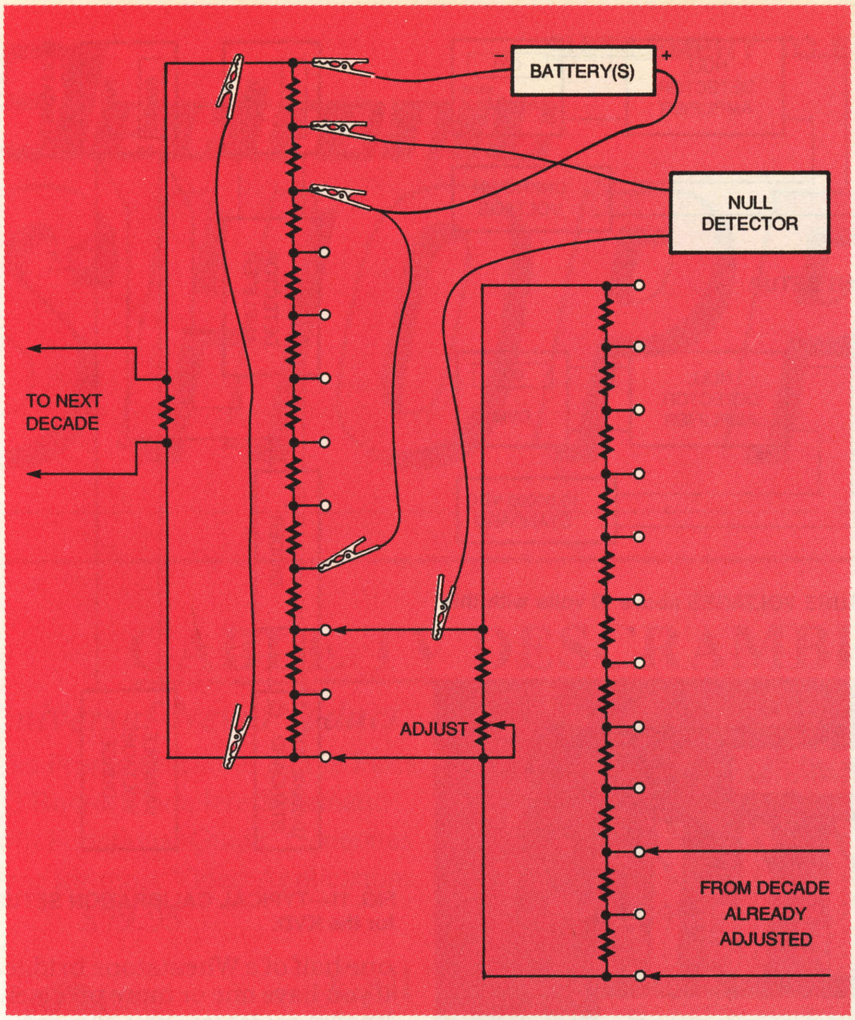

FIG. 6—HOOK UP CLIP LEADS AS SHOWN to adjust the padding networks.

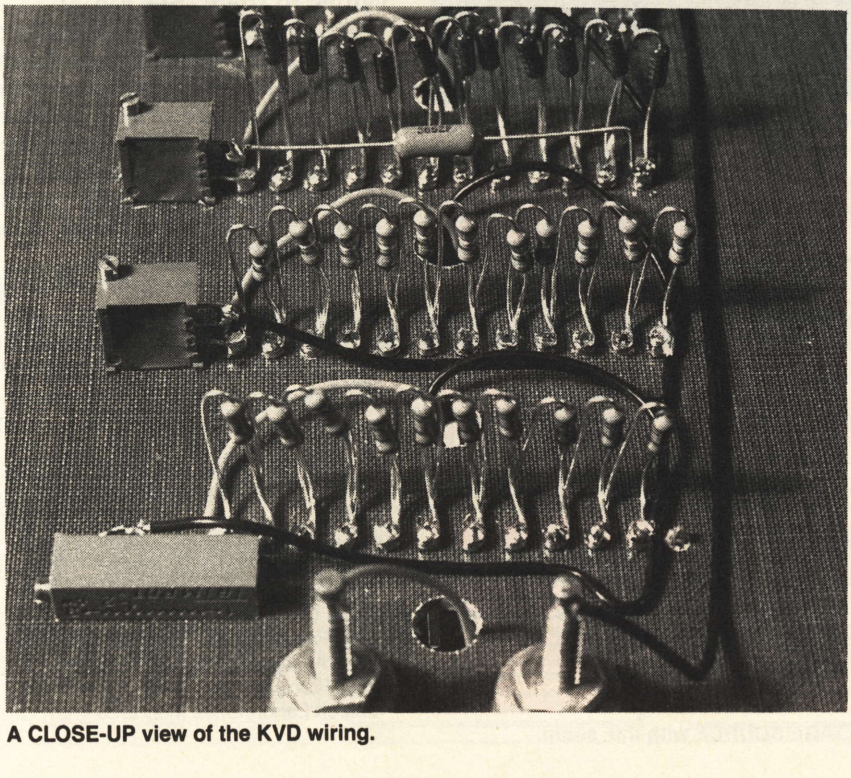

A CLOSE-UP view of the KVD wiring.

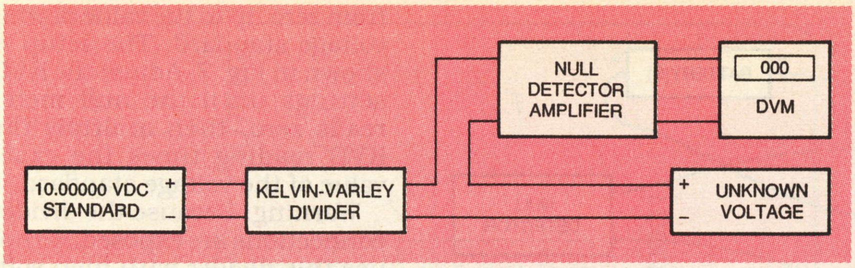

FIG. 7—THE SIMPLEST KVD MEASUREMENT SETUP.

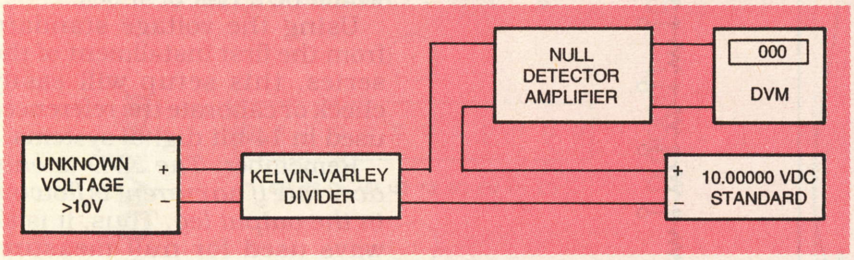

FIG. 8—THE KVD CAN BE USED TO MEASURE VOLTAGES above 10 volts with this setup.

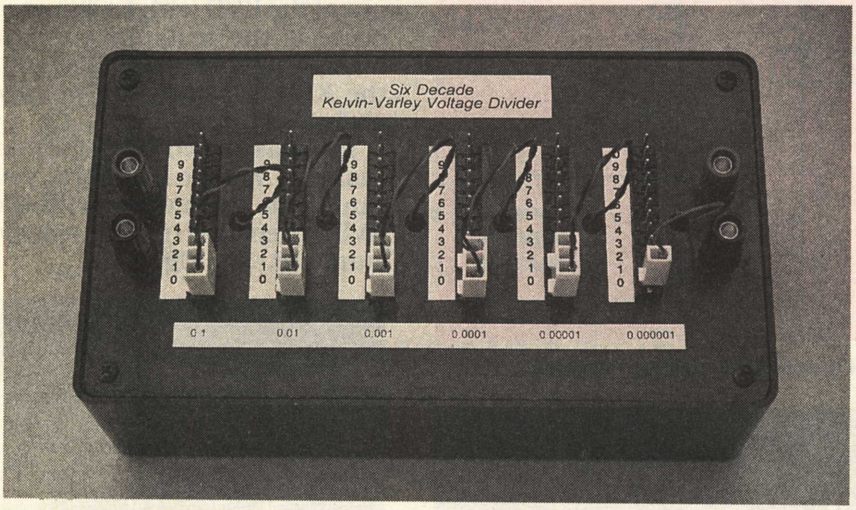

THE COMPLETE SIX-DECADE KVD installed in its case.

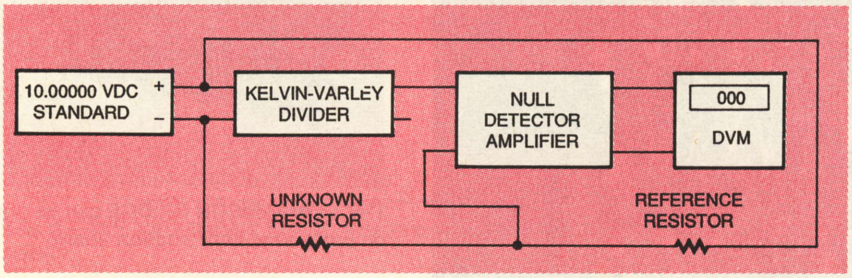

FIG. 9—USING THE KVD AS A BRIDGE.

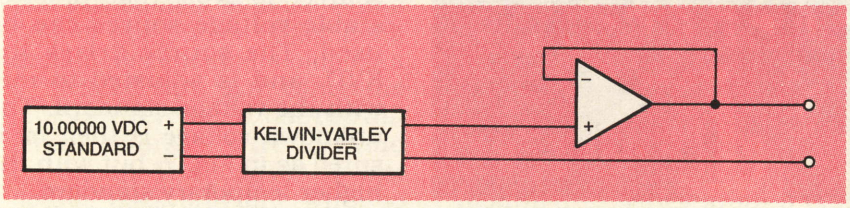

FIG. 10—THE KVD CAN BE USED AS A VOLTAGE SOURCE with this setup.

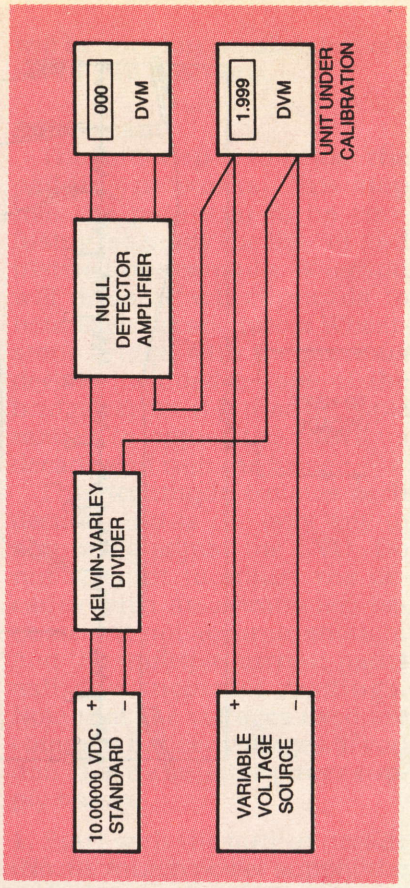

FIG. 11—TYPICAL CALIBRATION SETUP for the KVD.

one half of a Wheatstone bridge. If you have one or more precisely known resistors, you can accurately compare many different values to them. See Fig. 9.

Finally, the voltage standard and KVD can make a superb low current voltage source. The KVD is accurate only if no current is flowing in the output tap, so it must be buffered. See Fig. 10. This is a particularly useful arrangement for checking analog-to-digital converters.

We hope you enjoy building the equipment presented, and increasing your knowledge of traditional metrology techniques and making measurements that are accurate! Ω

REFERENCES

Basic Electrical Measurements, Melville B. Stout, Prentice-Hall, 1950
Calibration: Philosophy in Practice, Fluke Corp., 1994
JRL Precision, Vol. 1 No. 2, Julie Research Laboratories Inc., 1958
JRL Precision, Vol. 3 No. 5, Julie Research Laboratories Inc., 1960